# HBA30 linear actuator

Features：

1.DC permanent magnet motor, compact structure, strong, durable.
2.speed from 5mm/s to 35mm/s as requested
3.maximum load 7000N.
4.Normal tempreture range:-40℃ to +65℃
duty cycle:25% with full load
5.hall feedback available
6.build in limit switch or Clutch mechanical limit.
7.IP rated:IP65
8.certificate：CE
9.Widely used in various types of industrial equipment, special vehicles and the high load extremely harsh conditions

## specification

**HBA30—X— X— XXX—XXX — X— X — X — X — X — X — X —**

**item:**
HBA30 selcetion number：HBA

**volatage**
1—12VDC 2—24VDC
3—36VDC 4—48VDC

**transmission parame**
table 1.0

**stroke**
table 2.0

**mini retraceted leng**
table 3.0

**front attachment**
table 4.0

**rear attachment**
table 5.0

**direction of front**
0—90°（standard） 1—0°
2—30° 2—30'

**Overload protectio**
0—According to standard 1.2—
1—customized

**output signal**
0—无
1—hall （table 6.0）

**way of limit**
0—double automatic limit switch
1—limit switch signal output
2—customized

**cable option**
0—tin plating bare wire（

1—matched with controll
2—customized

线长

0—0.4M（standard） 1—1.0M
2—2M 3—customized

**table 1.0** transmission parameters of the code

| code | motor speed | rating load N | speed mm/s ±10% | | current A （normal tempreture） | | | | | | | |
|---|---|---|---|---|---|---|---|---|---|---|---|---|
| | | | | | 12 V | | 24 V | | 36 V | | 48 V | |
| | | | no load | full load | no load | full load | no load | full load | no load | full load | no load | full load |
| A | 2800/rpm | 2000 | 12 | 8 | 1.5 | 6.5 | 1.2 | 4 | 1 | 3 | 0.6 | 2.5 |
| B | 2800/rpm | 3000 | 12 | 7 | 1.5 | 10 | 1.2 | 6 | 1 | 5 | 0.6 | 4 |
| C | 4200/rpm | 4000 | 8.5 | 7 | 1.5 | 9.5 | 1.2 | 6 | 1 | 5 | 0.6 | 4 |
| D | 4200/rpm | 5000 | 8.5 | 7 | | | 1.2 | 7.5 | 1 | 6 | 0.6 | 5 |
| E | 4200/rpm | 6000 | 8.5 | 6.5 | | | 1.2 | 9 | 1 | 7 | 0.6 | 6 |

**table 2.0** stroke and load

| stroek mm | | | | | | | |
|---|---|---|---|---|---|---|---|
| 501～600 | | | | | | | |
| 401～500 | | | | | | | |
| 301～400 | | | | | | | |
| 50 ～300 | | | | | | | |
| | 1000 | 2000 | 3000 | 4000 | 5000 | 6000 | load |

**表3.0** dimension standard

1>: dimension standard L

50≤Stroke<400, L=S+200 400≤Stroke<600, L=S+250

mounting holes 90° （standard）.

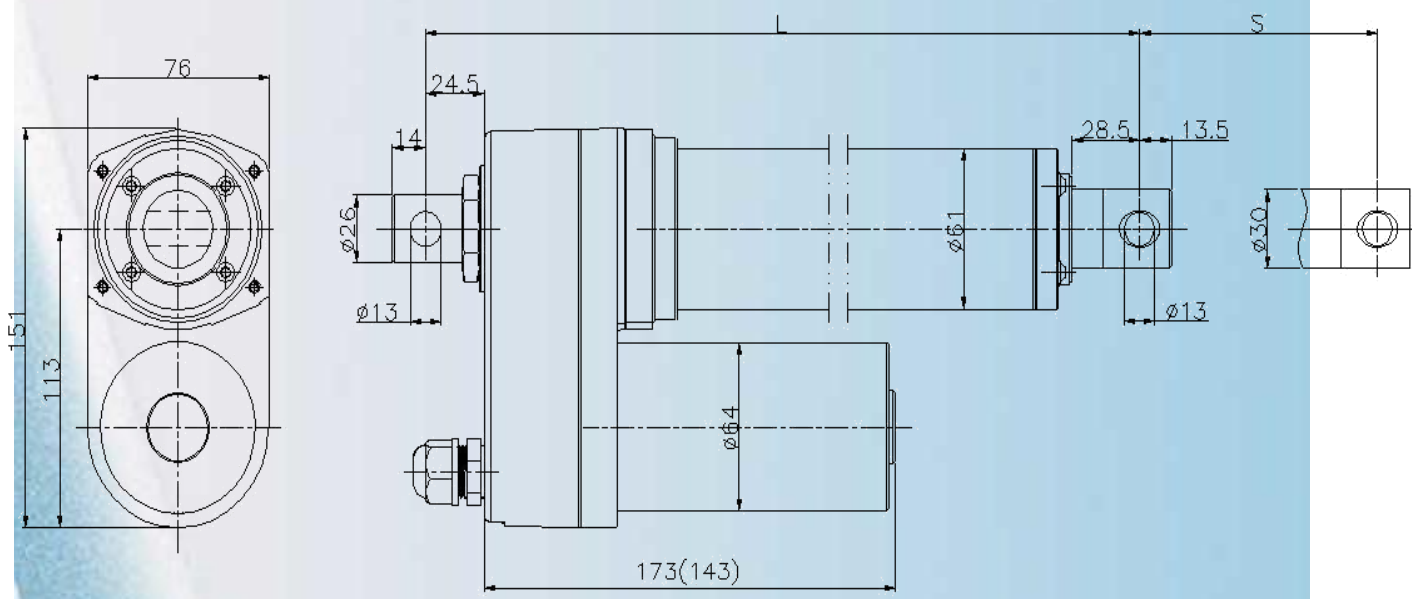

note:when front attachment is joint bearing ,threaded end  customized attachment ,the dim

**table4.** front attachment

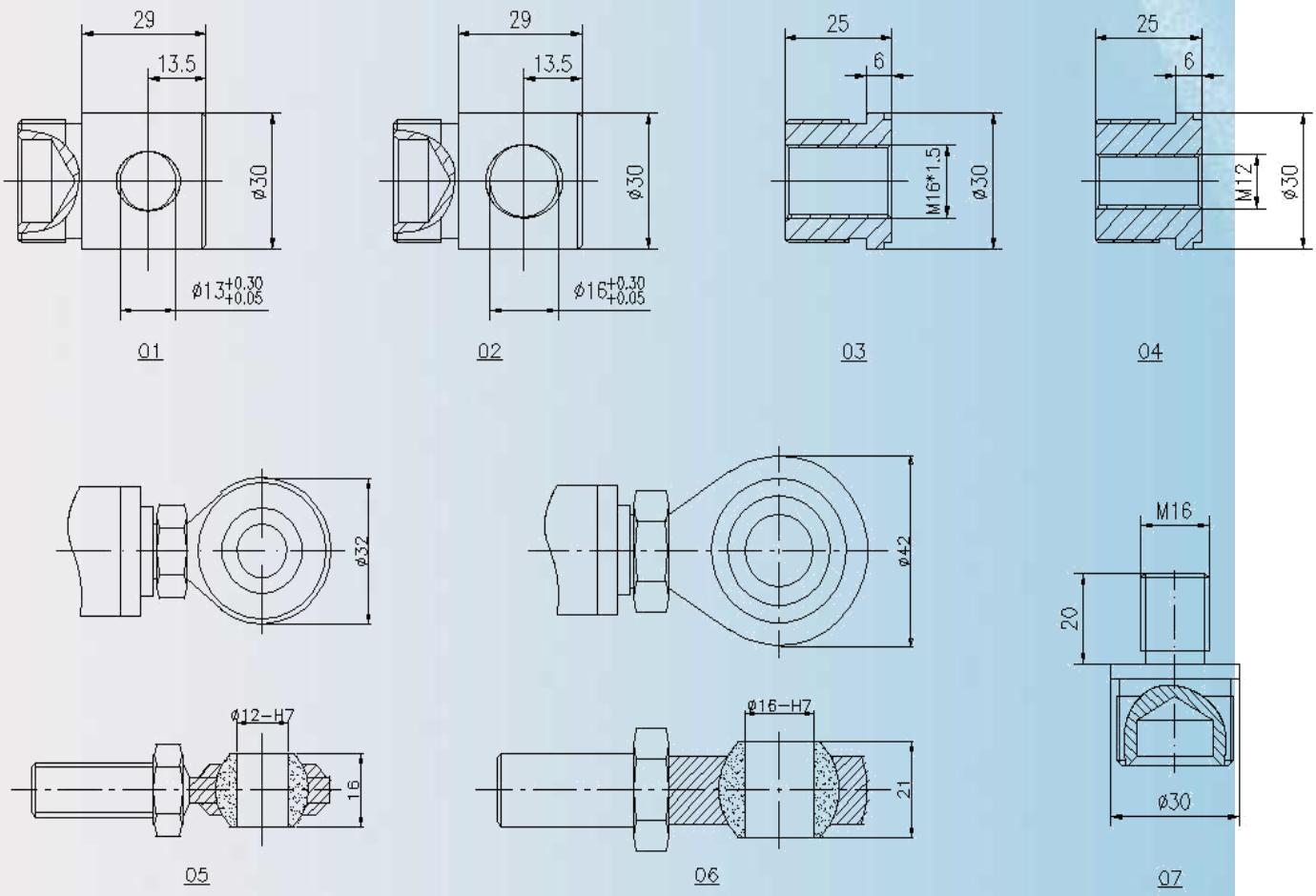


注：01——standard，10——customized

**table 5.** rear attachment

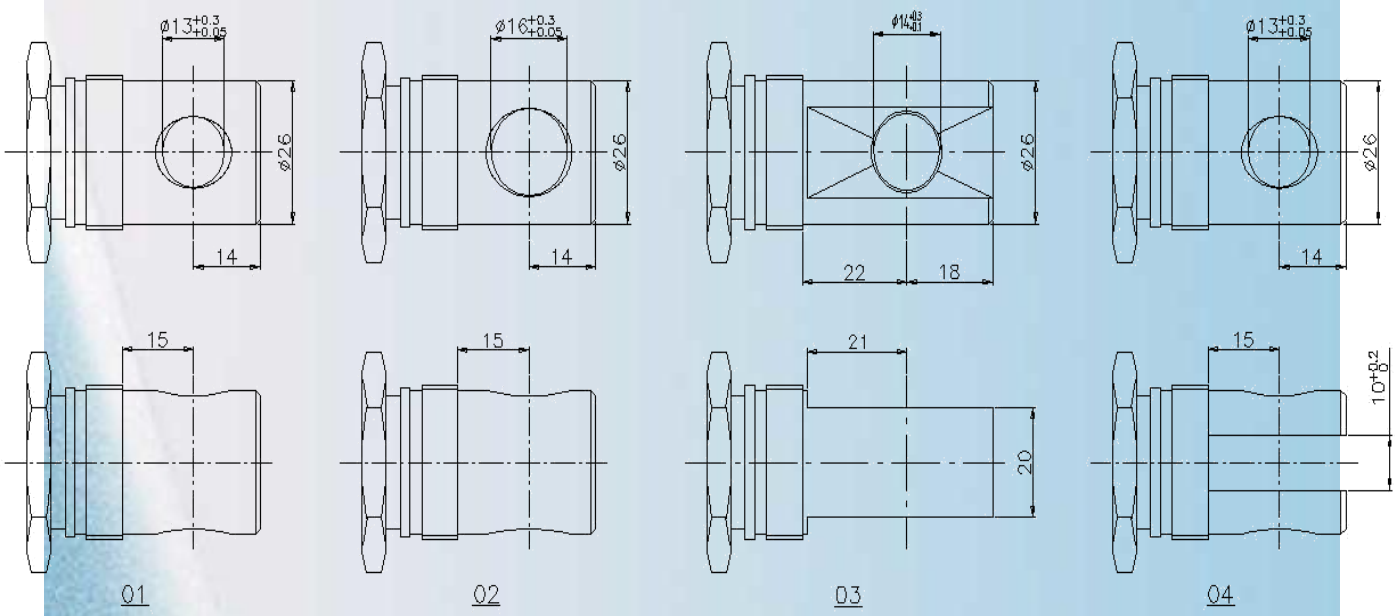

**table 6.0** hall feedback range